Airone Horizontal Laminar Flow Cabinet

www.safelab.co.uk

MADE IN BRITAIN®

Document: L63 Issue No: 03 Issue Date 29.06.2026

Airone Horizontal Laminar Flow Cabinet

Key Features

- Provides clean air conditions to ISO Class 4 / FED Class 10
- Compliant with BS EN 14644 cleanroom standards
- U15 ULPA filtration with 99.9998% efficiency at >0.12µm
- Horizontal laminar airflow for excellent product protection
- 4.3" full-colour touchscreen interface
- Constant airflow speed control
- Low airflow alarm
- Integral high-intensity LED lighting
- Clear side panels with cable access ports
- Low-energy, low-noise operation

The **Airone Horizontal Laminar Flow Cabinet** is designed to provide a clean, particle-controlled working environment for applications requiring product protection. The cabinet delivers a smooth horizontal flow of ULPA-filtered air across the work area, helping to protect sensitive samples, components and processes from airborne contamination.

Air is initially drawn through a high-quality pre-filter to remove larger particulates before passing through the fan system. It is then forced through a U15 ULPA filter, removing 99.9998% of particulates greater than 0.12µm in size. The filtered air flows horizontally across the working area towards the operator, maintaining a clean working environment to ISO Class 4 / FED Class 10.

The Airone HLF range is ideal for clean-air applications where product protection is required and operator protection is not necessary. The cabinet is suitable for use in laboratories, production areas, research facilities and clean environments where reliable contamination control is essential.

The cabinet is fitted with an intuitive 4.3" full-colour touchscreen interface, providing clear access to key operating functions and airflow information. Constant airflow speed control and low airflow alarm functionality help ensure dependable performance throughout operation.

The Airone Horizontal Laminar Flow Cabinet also offers strong environmental credentials. With low power consumption, high-efficiency fan technology and quiet operation, the cabinet delivers excellent performance while helping to reduce energy usage. High-intensity LED lighting is provided as standard to ensure even illumination of the work area.

Technical Information

Technical Data

	HLF1000	HLF1200	HLF1500	HLF1800
External (W x D x H)	1000 x 721 x 1166mm	1200 x 721 x 1166mm	1500 x 721 x 1166mm	1800 x 721 x 1166mm
Working Area (W x D x H)	984 x 540 x 715mm	1184 x 540 x 715mm	1484 x 540 x 715mm	1784 x 540 x 715mm
Air Cleanliness	> ISO Class 4 (FED Class 10)			
Noise Level	Circa. 50db (A)	Circa. 52db (A)	Circa. 54db (A)	
Airflow	950m³/hr	1175m³/hr	1325m³/hr	1600m³/hr
Airflow Speed	> 0.4m/s			
Power	65 watts	70 watts	80 watts	90 watts
Weight	100kg	115kg	140kg	170kg

Construction

Zintec Mild Steel Frame — Epoxy-coated to prevent corrosion

Solid 316—Grade Stainless Steel Worktop with Rolled Edge for comfort

Polycarbonate Side Glazing

Touchscreen Control Panel

Air Velocity Display

Control for:

- UV light (optional)
- Electrical socket (optional)
- Cabinet power
- Light variable intensity

Additional features:

- Airflow monitoring
- Auto airflow compensation
- Audio and visual alarms
- Run-time indicators

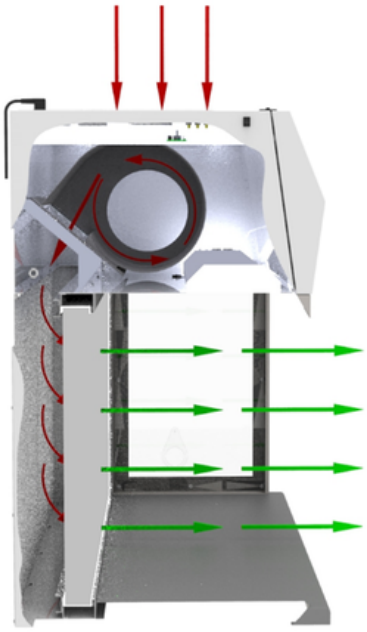

Airflow Diagram

Optional Extras

- Base stand
- UV Light & Night Door
- Double Electrical Socket

Service & Maintenance

Supporting Clean Air Performance and Product Protection

Regular servicing and validation help confirm that your **Airone Horizontal Laminar Flow Cabinet** continues to deliver the clean, ULPA-filtered airflow required for product and sample protection.

Trusted Expertise

Our service engineers are highly trained and experienced in the maintenance and validation of clean air cabinets, helping ensure your equipment continues to perform reliably.

We support routine servicing, airflow checks, filter assessment and validation requirements in line with your laboratory's application and internal quality procedures.

- **BS EN ISO 14644 clean air classification principles**

Safelab is also accredited by **Reset**, **Constructionline**, **SafeContractor**, **CHAS**, and **Building with Confidence**.

What Our Laminar Flow Cabinet Service & Validation Includes

- Airflow velocity checks across the working area
- U15 ULPA filter condition and integrity checks
- EV4 pre-filter inspection and replacement where required
- Operational checks on the fan system, controls and lighting
- Particle-count testing or clean air validation where required
- Service report with findings and recommendations

Flexible Service Programs

We offer a choice of service plans to support your cabinet, application and validation requirements:

- Routine servicing and preventative maintenance visits
- Filter checks and replacement to support continued clean air performance
- Specialist validation for performance evidence or QA documentation

With over 40 years of experience, Safelab, now part of the SDI Group, is a leading UK designer and manufacturer of high-quality fume cupboards and safety cabinets. Since 2003, we have produced more than 11,000 fume cupboards and provide servicing and support to more than 2,500 customers each year.

We work with a broad spectrum of clients, from pharmaceutical organisations, industrial R&D facilities, and major universities to schools and small laboratories.

By collaborating closely with consultants (often with BIM and REVIT information), laboratory furniture specialists, leading construction firms, and end users, Safelab has become the preferred supplier for many of the UK's largest laboratory projects.

What Safelab Stands For:

- Exceptional manufacturing quality
- Expert consultation
- Outstanding customer support
- Continuous innovation

To meet the diverse needs of our clients, we offer both filtered and ducted fume cupboards, delivering tailored solutions for every environment.

We also test, maintain, and service fume cupboards from any manufacturer, ensuring full compliance with COSHH Regulation 9.

Commitment to Excellence

Our dedication to quality, innovation, and customer care ensures that every Safelab fume cupboard is built to the highest standards.

With Safelab, you can be confident you are choosing the very best in laboratory safety and fume extraction technology.

UK Headquarters
Airone Building
8 Beaufighter Road
Weston Super Mare
Somerset
BS24 8EE

www.safelab.co.uk
safelab@safelab.co.uk
+ 44 (0)1934 421340